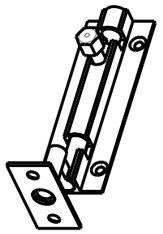

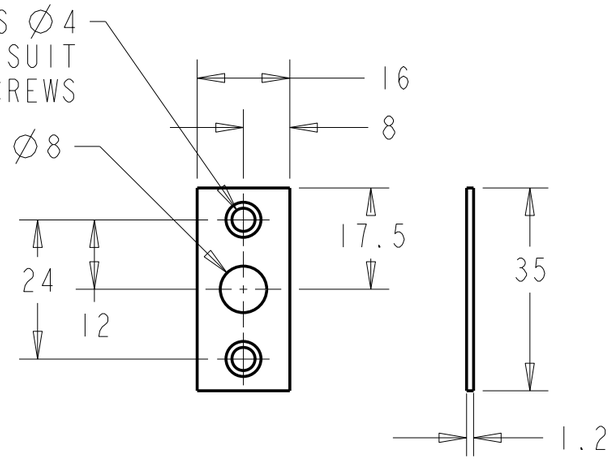

SCALE 1.000

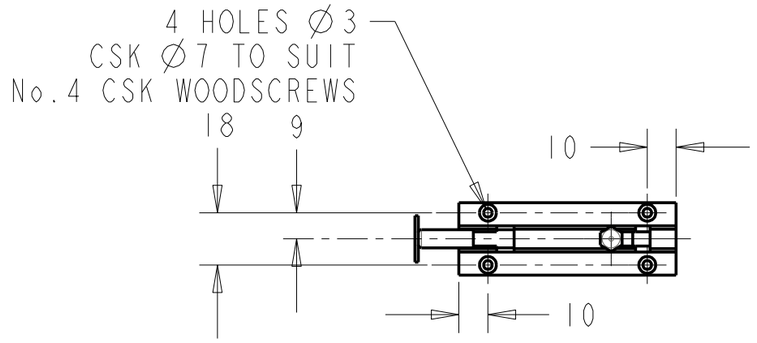

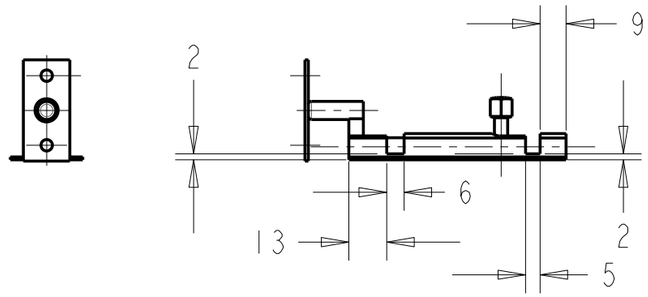

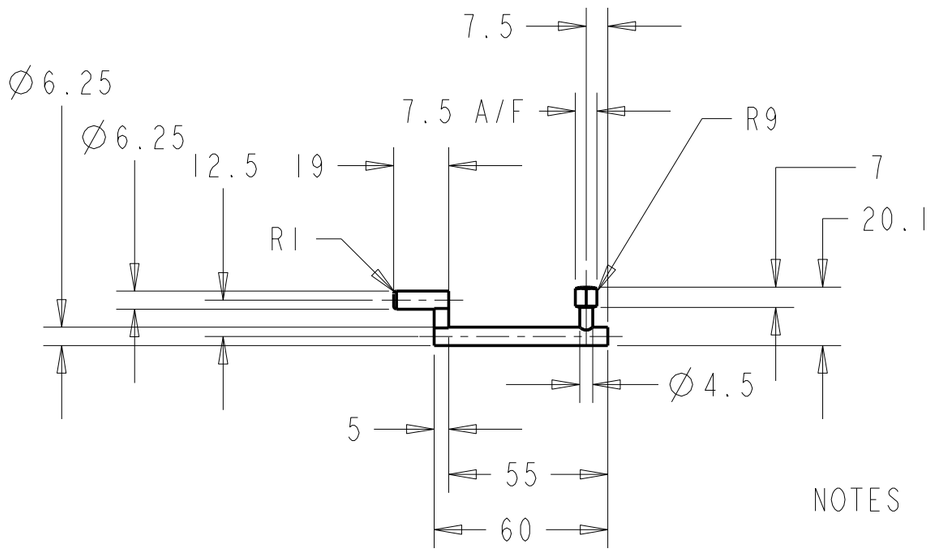

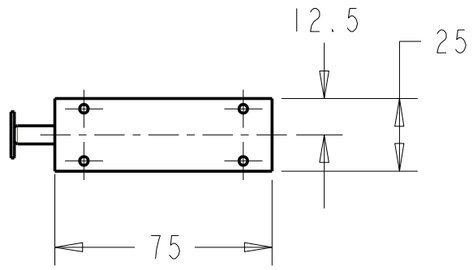

NOTES

1. MATERIAL - BRASS

2. TREATMENT - POLISHED

Unless Otherwise Stated, All Dimensions are in "mm"		
Company Name A.Perry and Co. (Hinges) Ltd Address Doulton Road, Cradley Heath, B64 5QW UK		Product Name 80-75 SOLID BRASS NECKED BARREL BOLTS 75mm(3") 1" WIDE
Drawn By- N.Hayward	Date 12-Feb-2011	Item Weight 58g
Drawing is Copyright Protected		